PROPERTY DAMAGE, SEVERE INJURY AND/OR DEATH COULD RESULT FROM:

(1) FAILING TO FOLLOW THE INSTRUCTIONS CONTAINED IN THIS MAINTENANCE MANUAL;
OR
(2) REPAIRING, MODIFYING OR ALTERING ANY BARBER/SCT PRODUCT IN A MANNER THAT IS NOT INCLUDED IN THIS MAINTENANCE MANUAL.

IF YOUR SPECIFIC APPLICATION:

(1) REQUIRES A DEVIATION FROM THE INSTRUCTIONS CONTAINED IN THIS MAINTENANCE MANUAL;
(2) REQUIRES A REPAIR, MODIFICATION OR ALTERATION OF A BARBER/SCT PRODUCT THAT IS NOT INCLUDED IN THIS MAINTENANCE MANUAL;
OR
(3) RAISES ANY QUESTION ABOUT THE INSTRUCTIONS SPECIFIED IN THIS MAINTENANCE MANUAL,

PLEASE CONTACT YOUR BARBER/SCT REPRESENTATIVE FOR SPECIFIC INSTRUCTIONS REGARDING YOUR APPLICATION.

TO CONTACT YOUR BARBER/SCT REPRESENTATIVE:

PLEASE SEE THE “STANDARD CAR TRUCK COMPANY CONTACT INFORMATION” PAGE AT THE START OF THE FULL MANUAL.

General Information

- Truck Component Diagrams
- AAR Code Numbers
- Bolster and Side Frame Marking Diagrams
- Bolster and Side Frame Nomenclature
- Standard Car Truck Company Trademarks
- Foundry Identification Marks
- AAR Interchange Rules
- Reference Publications for Trucks

Wabtec, Standard Car Truck
6400 Shafer Court – Ste 450, Rosemont, Illinois 60018, U.S.A.
Phone (847) 692-6050 Email: SCTTechCustomerService@Wabtec.com

Always Use Original
Barber Parts

Barber Stabilized Truck

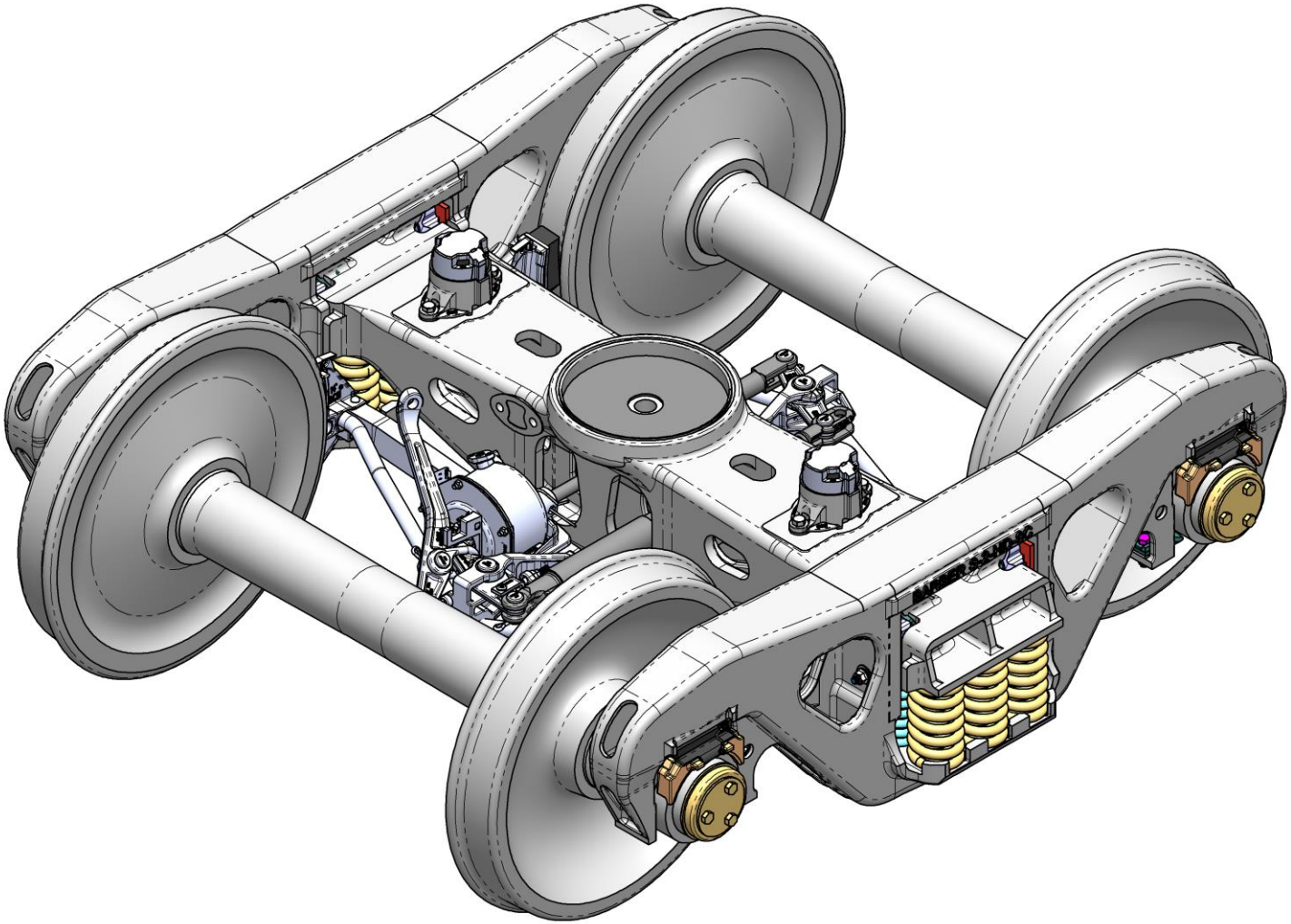

Wabtec, Standard Car Truck
6400 Shafer Court – Ste 450, Rosemont, Illinois 60018, U.S.A.
Phone (847) 692-6050 Email: SCTTechCustomerService@Wabtec.com

Always Use Original
Barber Parts

Barber Stabilized Truck Component Diagram

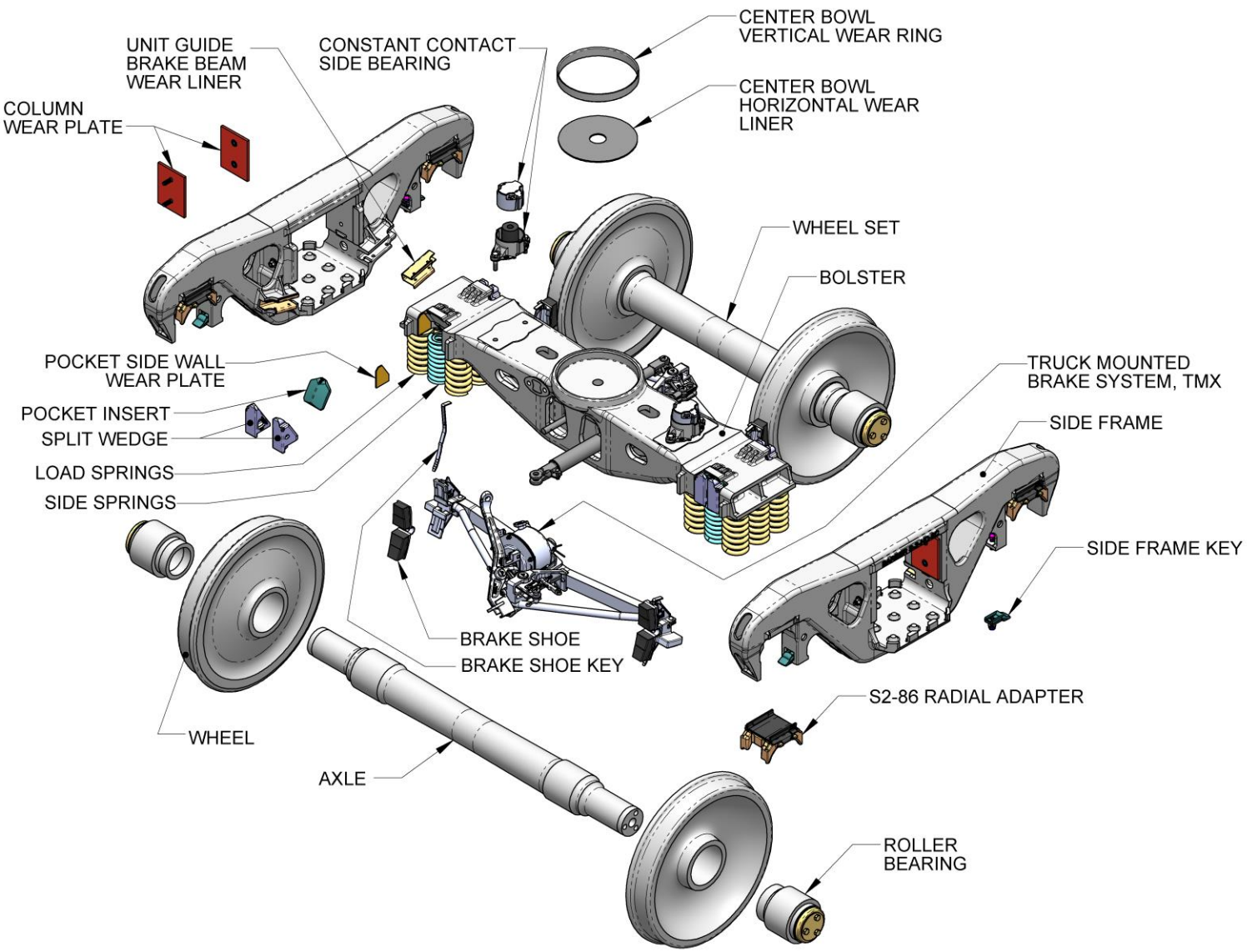

AAR Code Numbers – Side Frames

CODE NUMBER EXAMPLE

CODE SPACE NUMBER	1	2	3	4&5	6	7	8	9
CODE NUMBER	F	9	S	07	A	N	U	A
	SIDE FRAME	6 1/2" X 12" JOURNAL	BARBER S-2	STANDARD DESIGN - 3 11/16" SPRING TRAVEL	UPRIGHT TENSION MEMBER - GRADE "B" STEEL	NARROW PEDESTAL	UNIT BRAKE BEAM BRACKET	NO SPECIAL FEATURES AT CENTER AREA

- ALL CODE NUMBERS MUST CONTAIN NINE SYMBOLS
- THE CODE NUMBER WILL BE HYPHENATED AS FOLLOWS: F9S-07AN-UA
- A SPACE MY BE USED IN PLACE OF A HYPHEN WHEN MARKING A CASTING

SEE DRAWINGS EC-3034 AND EC-3038 FOR AAR CODE DESIGNATING SIDE FRAME AND BOLSTER DESIGN FEATURES. (AAR MANUAL OF STANDARDS AND RECOMMENDED PRACTICES, SECTION D-PART II).

AAR Code Numbers – Bolsters

CODE NUMBER EXAMPLE

CODE SPACE NUMBER	1	2	3	4&5	6	7	8	9
CODE NUMBER	B	9	S	21	E	A	B	X
	BOLSTER	6 1/2" X 12" JOURNAL	BARBER S-2	STANDARD DESIGN	GRADE "B" STEEL - ROD THRU - L.H. D.L. BRACKET	D.L. BRACKET PIN HOLE LOCATION	5 HOLE SIDE BEARING PAD	BRAKE ROD OPENING ARRANGED FOR EITHER CONVENTIONAL OR WABCOPAC BRAKES

- ALL CODE NUMBERS MUST CONTAIN NINE SYMBOLS
- THE CODE NUMBER WILL BE HYPHENATED AS FOLLOWS: B9S-21EA-BX
- A SPACE MY BE USED IN PLACE OF A HYPHEN WHEN MARKING A CASTING

SEE DRAWINGS EC-3034 AND EC-3038 FOR AAR CODE DESIGNATING SIDE FRAME AND BOLSTER DESIGN FEATURES. (AAR MANUAL OF STANDARDS AND RECOMMENDED PRACTICES, SECTION D-PART II).

Bolster Marking Diagram

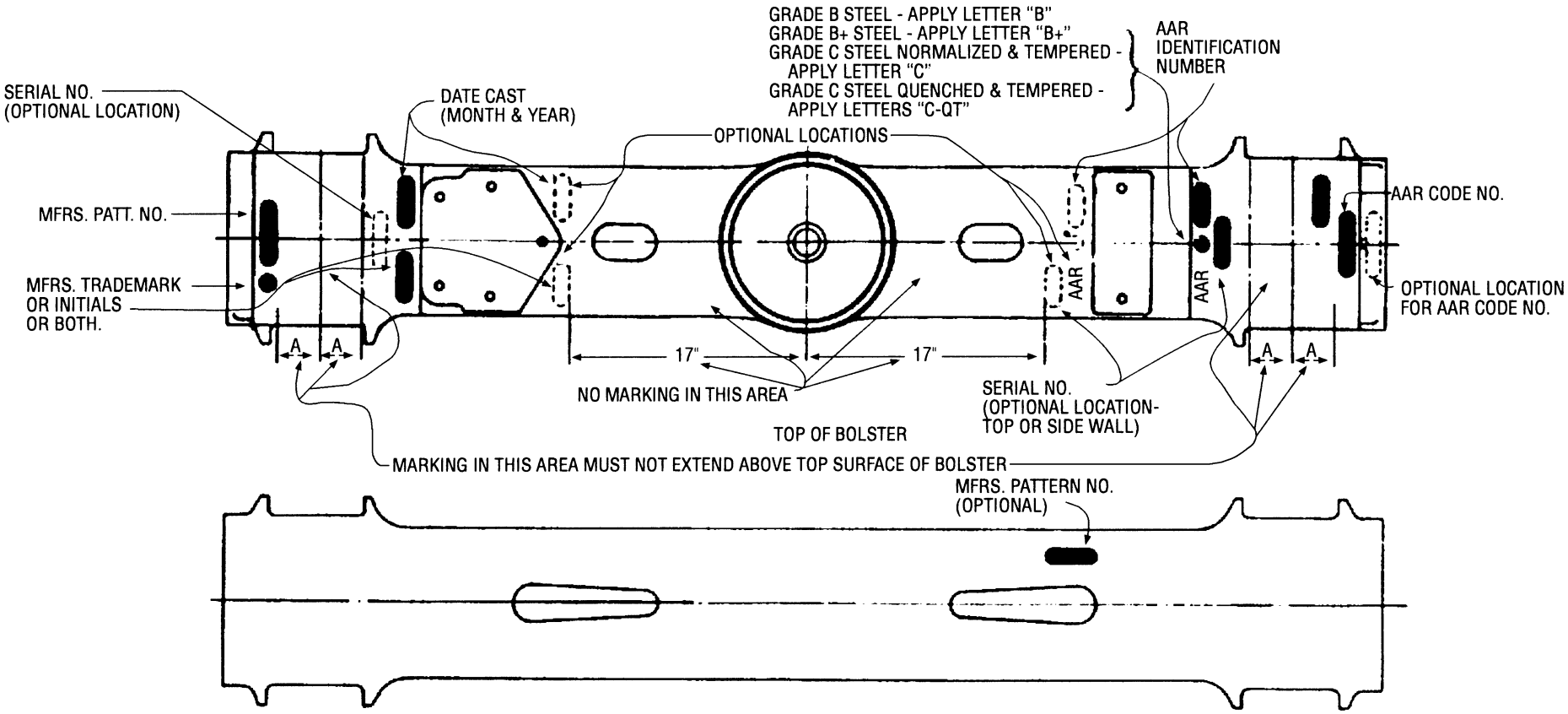

Journal Size	Dim. "A"
5 x 9	3 1/2
5 1/2 x 10	3 3/4
6 x 11	4 1/4
6 1/2 x 12 6 1/2 x 9	4 1/2
7 x 12	5

BOTTOM OF BOLSTER

NOTES:
1. MARKING LOCATION SHOULD CONFORM GENERALLY TO THE AREAS INDICATED.
2. AAR IDENTIFICATION NUMBER MUST BE CAST INTEGRAL TO THE CASTING.

NOTE:
ALL MARKINGS TO BE IN RAISED LETTERS OR FIGURES NOT LESS THAN 3/4" HIGH, PREFERABLY 1" HIGH, UNLESS OTHERWISE SPECIFIED.

Side Frame Marking Diagram

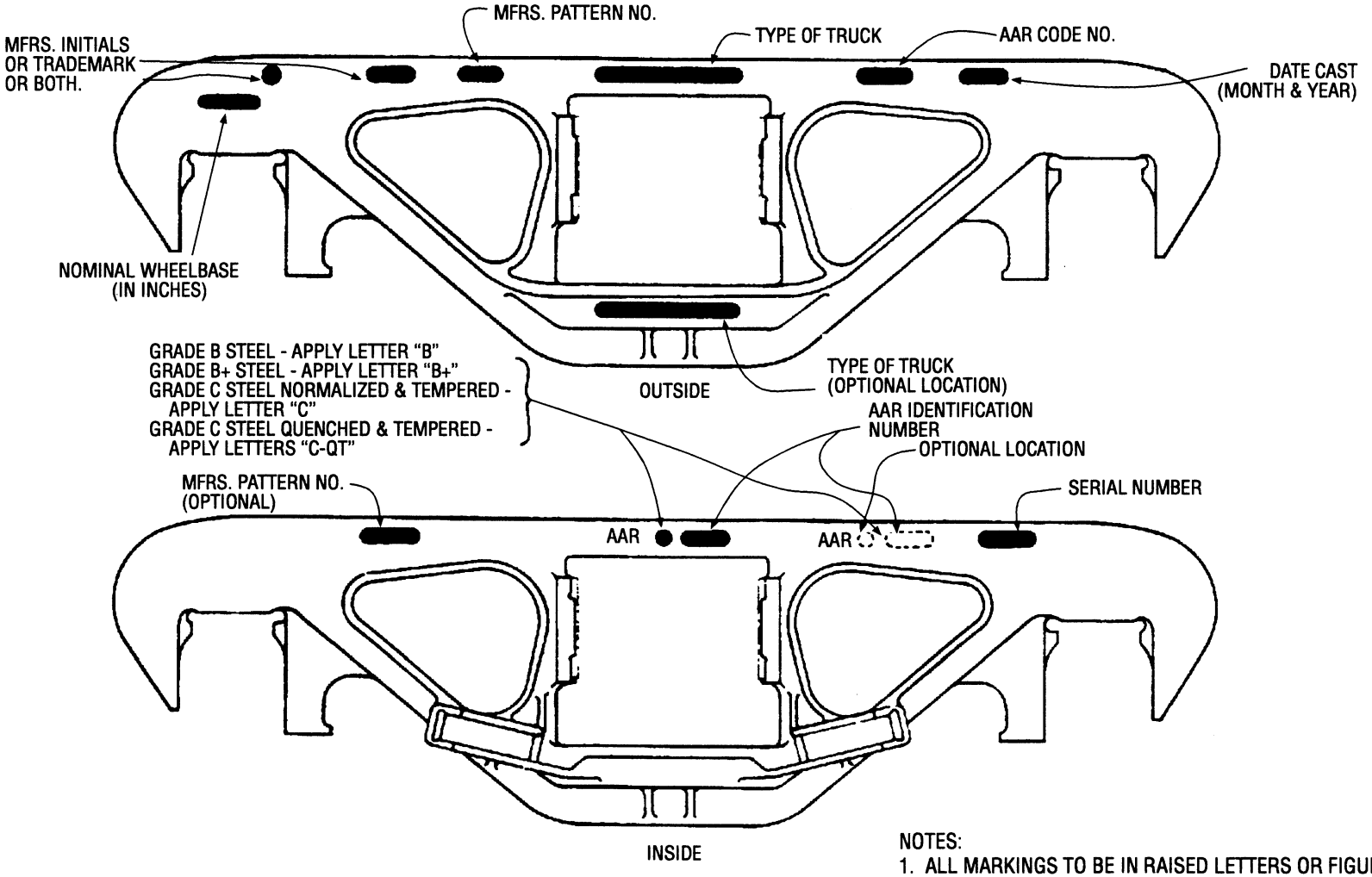

NOTES:

1. ALL MARKINGS TO BE IN RAISED LETTERS OR FIGURES NOT LESS THAN 3/4" HIGH, PREFERABLY 1" HIGH.
2. MARKING LOCATION SHOULD CONFORM GENERALLY TO THE AREAS INDICATED.
3. AAR IDENTIFICATION NUMBER MUST BE CAST INTEGRAL TO THE CASTING.
4. IF SIDE FRAME IS A COMBINATION, TYPE OF TRUCK MAY BE OMITTED IF PROPERLY CODED.

Bolster Nomenclature

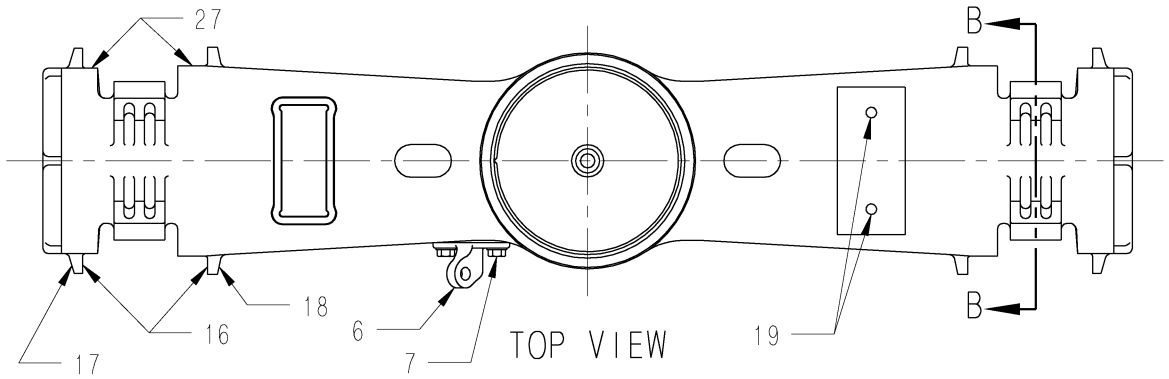

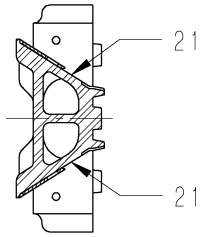

SECTION B-B

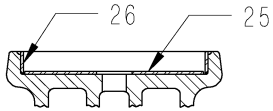

SECTION A-A
SHOWN WITH WEAR LINERS

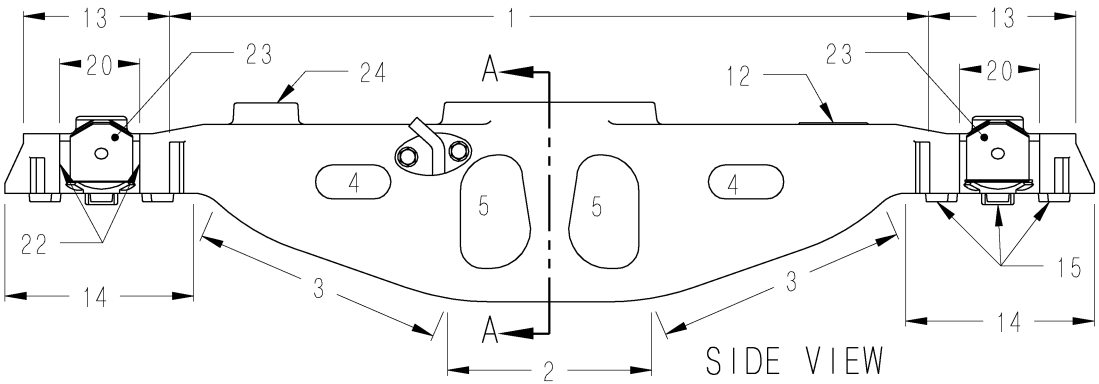

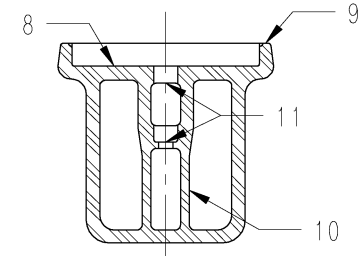

SECTION A-A

1. Top or Compression Member
2. Bottom Center Member
3. Diagonal Tension Member
4. Side Wall Lightner Holes
5. Brake Rod Holes
6. Dead Lever Lug (Left Hand Shown)
7. Dead Lever Lug Mounting Hardware
8. Center Plate Bearing Surface
9. Center Plate Rim
10. Center Post
11. King Pin Well
12. Side Bearing Pads
13. Ends
14. Spring Seats
15. Spring Seat Lugs
16. Columns
17. Outer Column Guides – Gibs
18. Inner Column Guides – Gibs
19. Side Bearing Retainer Holes
20. Bolster Pocket
21. Bolster Pocket Slope Surfaces
22. Bolster Pocket Side Walls
23. Bolster Pocket Wear Plate
24. Side Bearing Pocket
25. Center Plate Horizontal Wear Liner
26. Center Plate Vertical Ring Wear Liner
27. Lands

Side Frame Nomenclature

1. Top Member Center
2. Compression Members
3. Compression Member Flanges
4. Bottom Center
5. Diagonal Tension
6. Tension Member Flanges
7. Columns
8. Windows
9. Top Ends
10. Sides of Column
11. Lower Bolster Opening
12. Spring Seat Flanges
13. Spring Seat Ribs
14. Retainer Key Slot
15. Inner Pedestal Legs
16. Pedestal Roof
17. Outer Pedestal Legs
18. Bolster Anti-Rotation Lugs
19. Parting Line – Top Member
20. Top End Openings
21. Unit Guide (Brake Beam) Brackets
22. Bottom Center Drain Holes
23. Parting Line – Bottom Member
24. Top Member Bridge
25. Wear Plate Retainer Holes
26. Column Face
27. Column Wear Plate Retainer Beads
28. Spring Seat
29. Spring Seat Bosses or Lugs
30. Pedestal Thrust Lugs
31. Column Wear Plate

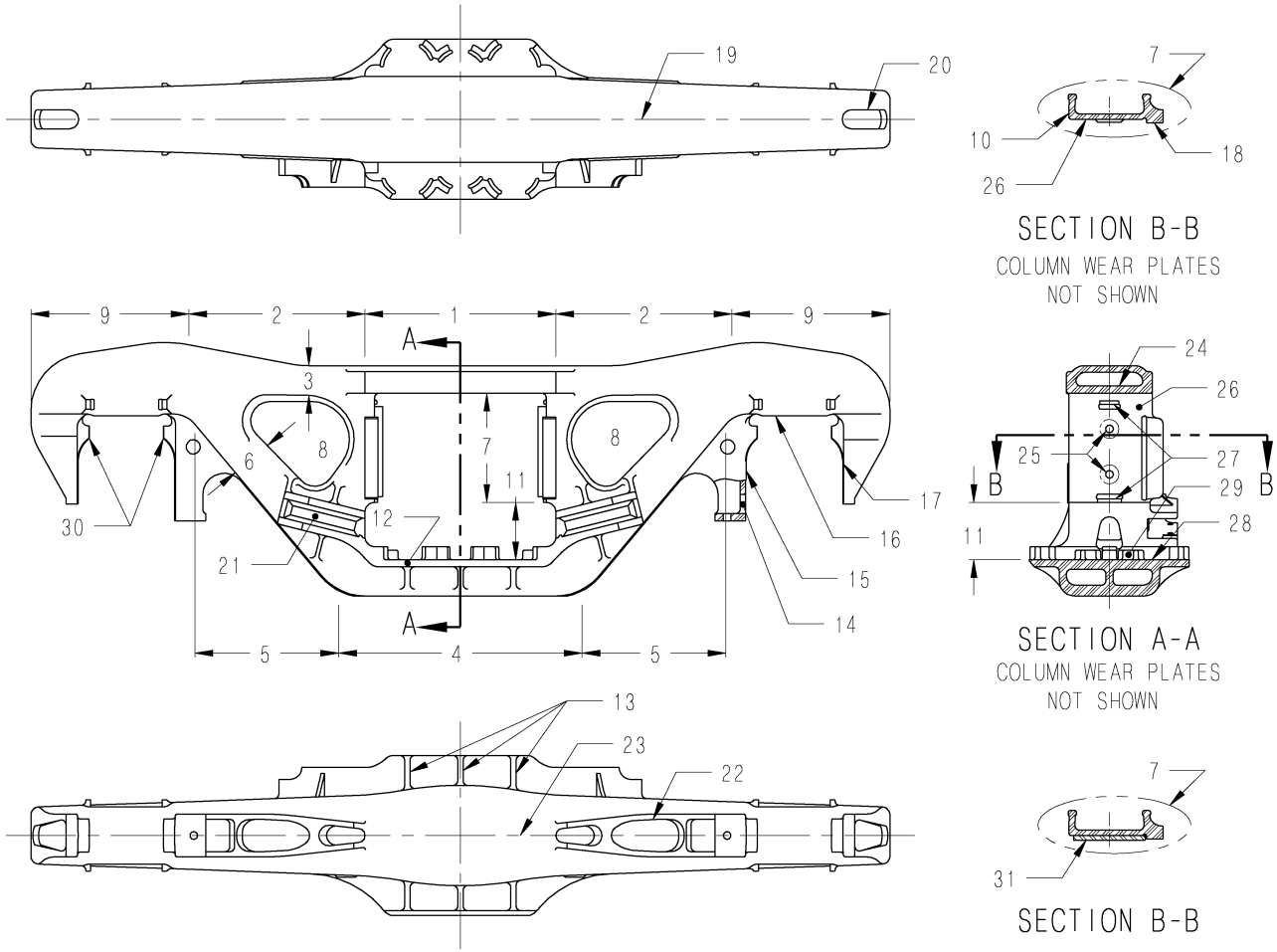

Standard Car Truck Company Trademarks

BARBER®

BARBER S-2®

C-PEP®

SCT CO®

S-2-HD®

BARBER®

S-2-D®

Barber Spring™

BARBER®

S-2-E®

FRAME BRACE®

TECHCARE®

TwinGuard®

BARBER-BETTENDORF®

Look for these symbols to know it is a quality **BARBER** component from Standard Car Truck Company.

® Registered Trademark in United States, Canada, and Mexico to Standard Car Truck Company.

Foundry Identification Markings

Manufacturer	Initials	Monogram
ABC-NACO Technologies	NM&SC CO	NONE
Cicero		
Melrose Park		
Sharon		
Mexico		
ASF-Keystone		
Alliance	ASF	A
Granite City	ASF	G
East St. Louis	ASF	E
Mexico	ASF	SM
Bradford Kendall		
Kilburn	NONE	BK–K
Runcorn (Bradken)	NONE	BK–R
British Steel Corp.	NONE	
Birdsboro Corp.	BIRDSBORO	D S 1967
Buckeye Steel Castings	NONE	B

Manufacturer	Initials	Monogram
Bucyrus Erie	BE	B E
Canadian Steel Foundries	ASF or ASF & CANCAR or CSF	NONE
CKD Kutna Hora, A.S.	CKD	
Cobrasma	NONE	C
Columbus Steel Castings	CSC	C
Cometna	NONE	COMETNA
Comsteel	NONE	
Construcciones y Auxiliar	CAF-SPAIN	NONE
Dofasco (Dominion)	DOFASCO	D
Dresser Transportation (Symington Wayne/Gould)	GOULD	G
Fabrica Nacional de Vagoes	FNV	NONE
Henricot	HENRICOTT	NONE
Hindusthan Engineering & Industries LTD. (Hindusthan Development Corporation LTD.)	HDC	HEI

Manufacturer	Initials	Monogram
Nippon Sharyo	NISSHA	
Ohio Castings Co. Alliance	ACC	A
Chicago Casting Co. Cicero	CCC	C
Ohio Steel Foundry Co.	OSF	
Pittron (Pittsburg Steel)	PSF	NONE
Qiqihar	QC	NONE
Qishuyan	QS	NONE
SCAW	NONE	
Scullin	NONE	
Sidena	NONE	S
Sahagun	NONE	
South African Railways	S A R	
Stanbras	SB	NONE
Sumitomo	SMI	
Vulcan	NONE	

AAR Interchange Rules

The purpose of this maintenance manual is, where applicable, to supplement the Association of American Railroads (AAR) Interchange Rules Field Manual for:

Rule 47 – Truck Bolsters

Rule 48 – Truck Side Frames

Rule 50 – Truck Springs (Coil, Elliptic, Snubbers and Package)

Rule 88 – Mechanical Requirements for Acceptance

Rule 90 – Cars and/or Car Parts Prohibited In Interchange

In the event of conflict, the AAR “Field Manual” and “Office Manual” of Interchange Rules shall supersede this manual.

Reference Publications for Freight Car Trucks

AAR Publications

Rules of Interchange for Railroad Cars

Office Manual
Field Manual

Manual of Standards & Recommended Practices

Section A – Specifications, Standards and Practices

Section B – Couplers and Freight Car Draft Components
– Part II – Drawgear Inspection and Maintenance Manual

Section C – Car Construction, Fundamentals and Details
– Part II, Volume 1 – Specifications for Design, Fabrication and Construction of Freight Cars
– Part III – Specifications for Tank Cars

Section D – Trucks and Truck Details

Section E – Brakes & Brake Equipment
– Part II – Maintenance Requirements for Freight Car Air Brake Control Valves and Equipment

Section G – Wheels and Axles
– Part II – Wheel and Axle (Shop) Manual

Section H – Journal Bearings & Lubrication
– Part II – Roller Bearing (Shop) Manual
– Part III – Lubrication (Shop) Manual

Section L – Lettering & Marking of Cars

Section S – Casting Details
– M-214 – Classification and Repair Procedures for Used and Reconditioned AAR Approved Side Frames and Bolsters Applicable to Interchange Service
– Part II – Code for Designating Design Features for Side Frames and Truck Bolsters
– Part III – Coupler and Yoke Details

Supplement to the Manual of Standards & Recommended Practices

Circulars

Multi Level Manual

Interchange Rules – Arbitration Cases

Miscellaneous Publications

The Car & Locomotive Cyclopedia
FRA Saftey Standards

Where to Obtain Publications

AAR Publications

Central Operations Group
50 “F” Street N.W.
Washington, D.C. 20001-1564
Phone: 202/639-2211
Fax: 202/639-2156

TTCI

Technical Standards
55500 DOT Road
Pueblo, Co 81001
719-584-0750

Car & Locomotive Cyclopedia

Railway Educational Bureau
1809 Capitol Avenue
Omaha, Nebraska 68102
Phone: 402/346-4300

Railroad Freight Car Safety Standards

Railway Education Bureau
1809 Capitol Avenue
Omaha, Nebraska 68102
Phone: 402/346-4300